PAHI
Barcelona

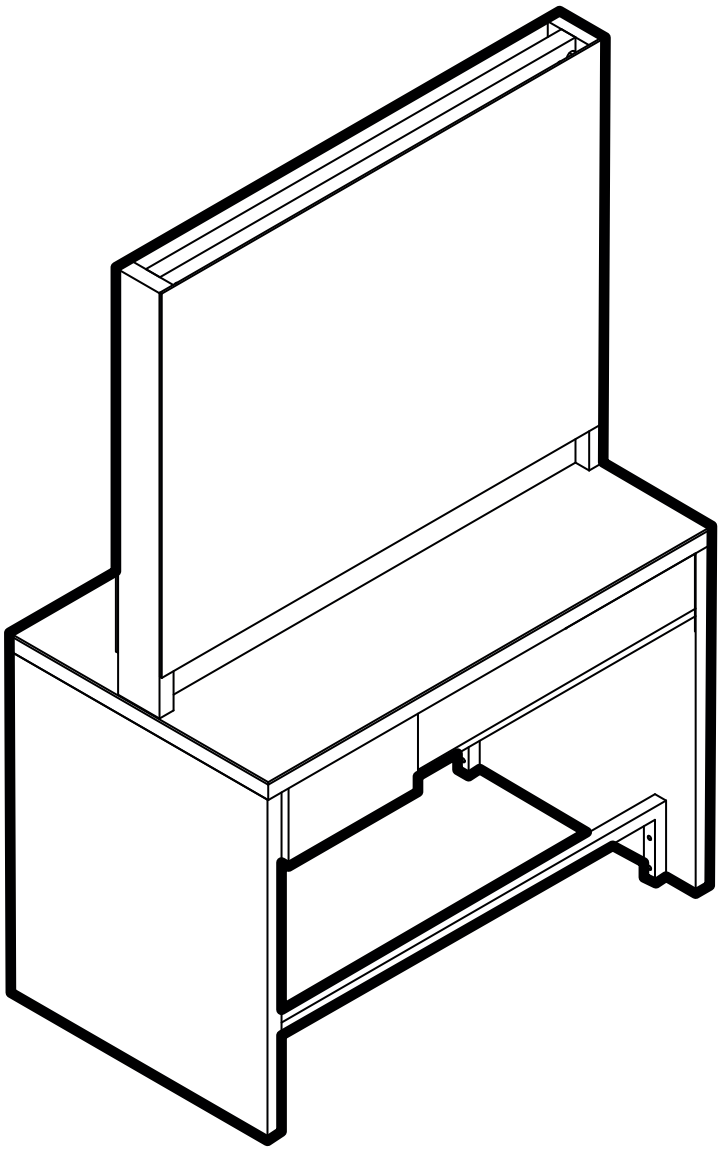

BINOMI 2S

Ref. M0942 (2S)

Styling Units

Updated: 01 Feb. 2018

Dimensions /Dimensiones/Dimensions

(mm)

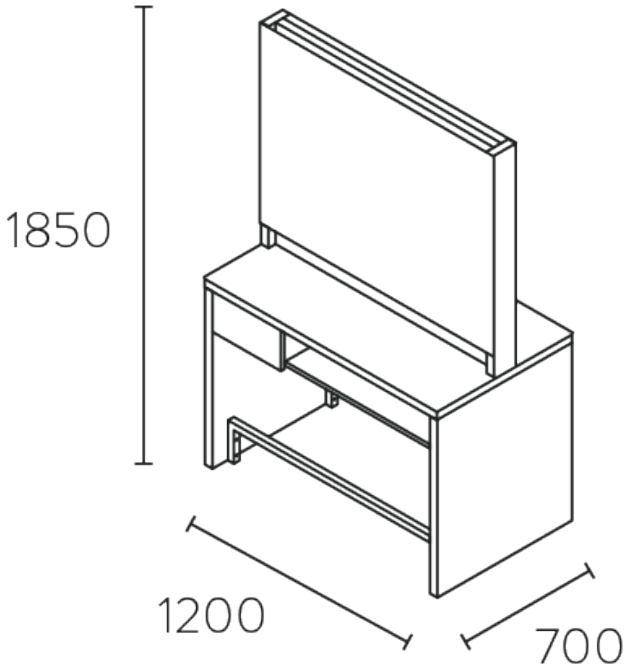

In the box /En la caja/Dans la boîte

Styling Unit /Tocador/Console de coiffage

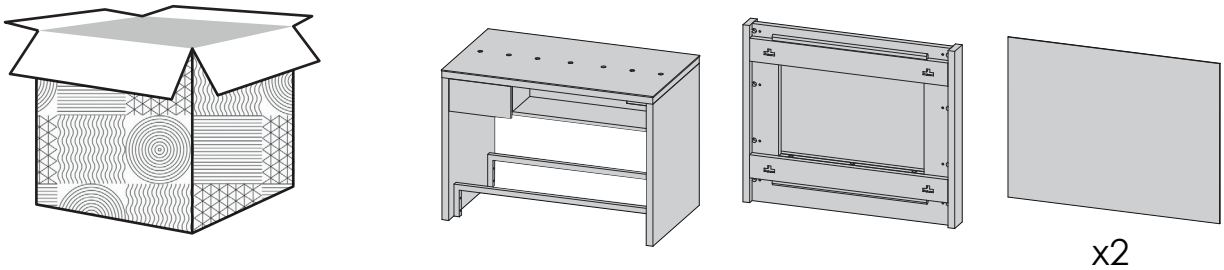

Hardware /Herrajes/Materiel

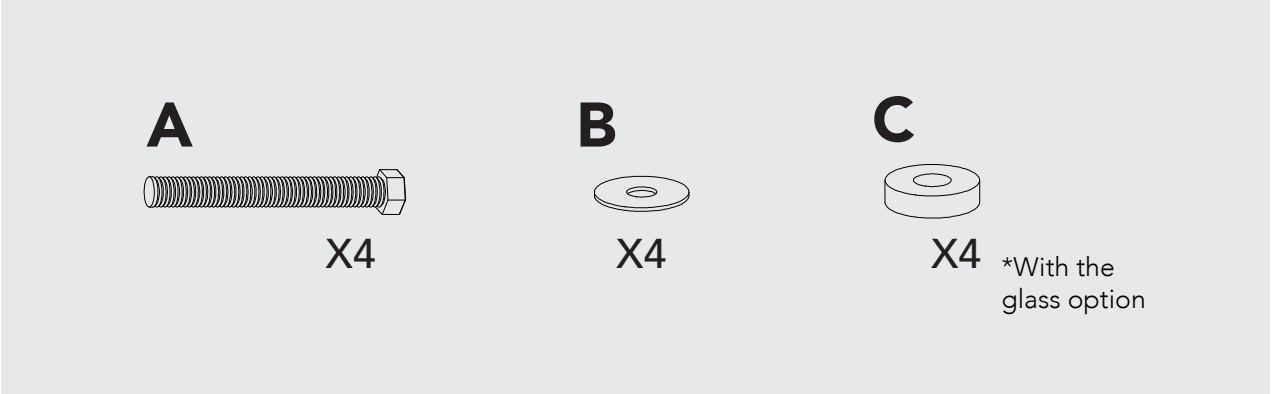

Assembling /Montaje/Assemblage

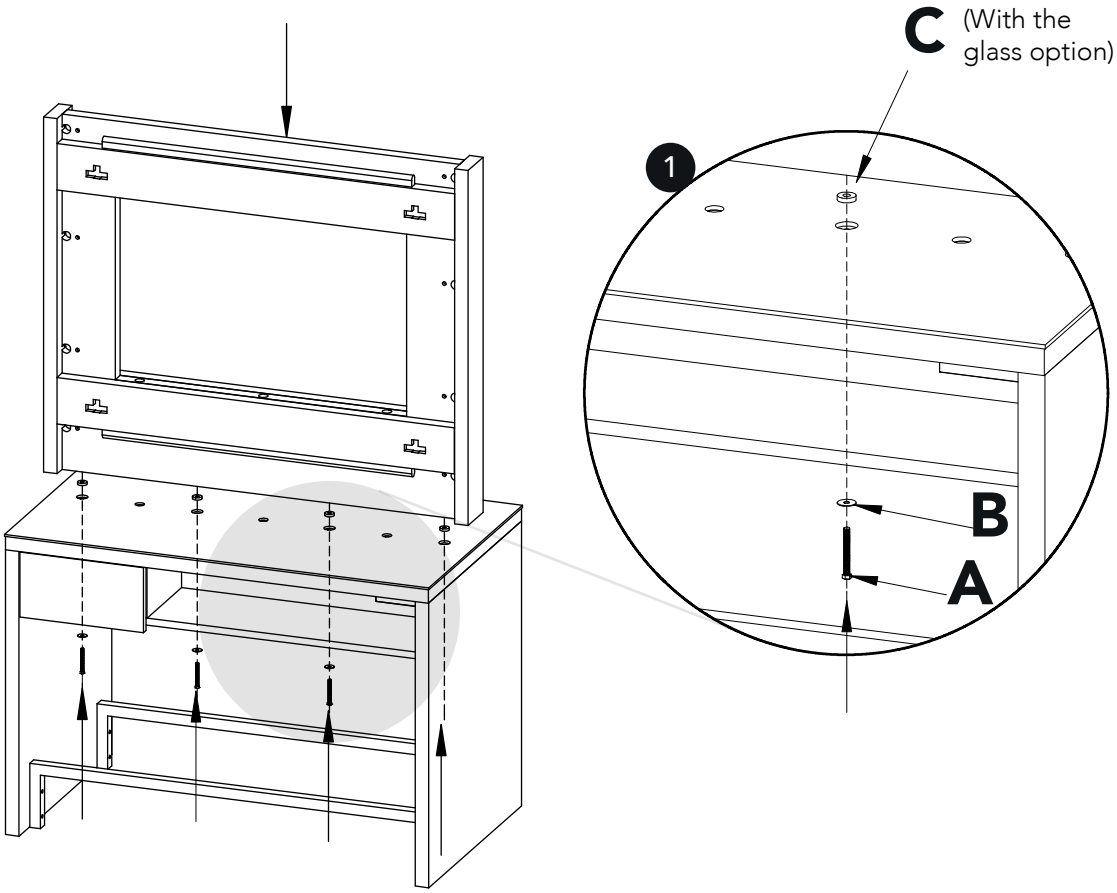

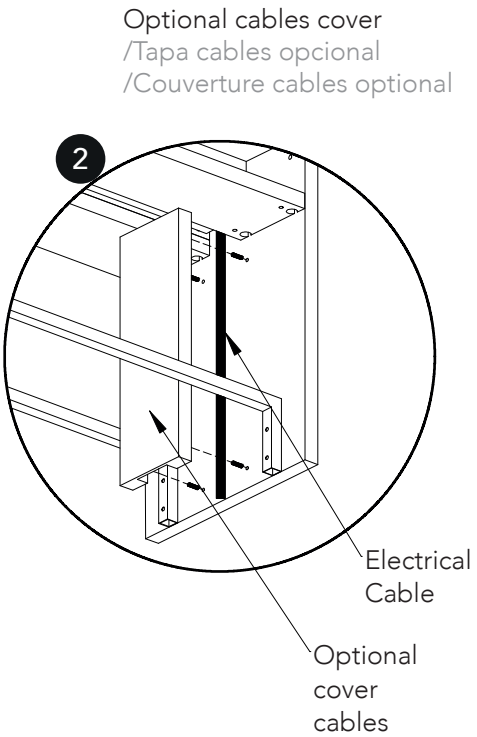

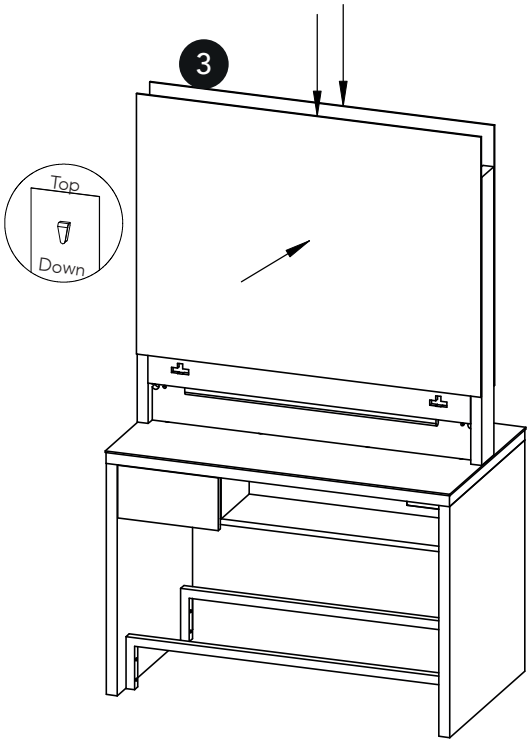

Light Entrance Point /Punto de entrada de luz/Point d'entrée de lumière

(mm) Top View /Vista superior/Vue de dessus

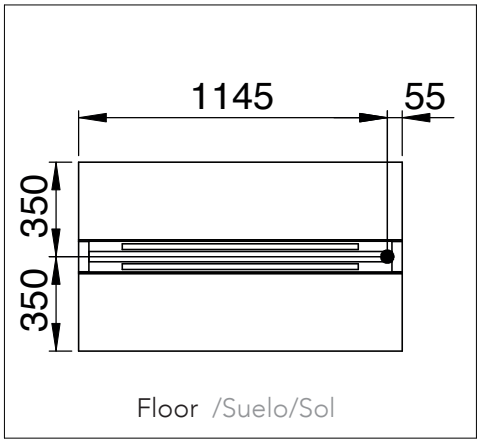

Address

Pol. Ind. Mas Galí
Barcelona, 32-34
08503 Gurb
Barcelona

Contact

T +34 938 890 417
F +34 938 890 585
pahi@pahi.com
PAHI.COM